446-3 SPIDER

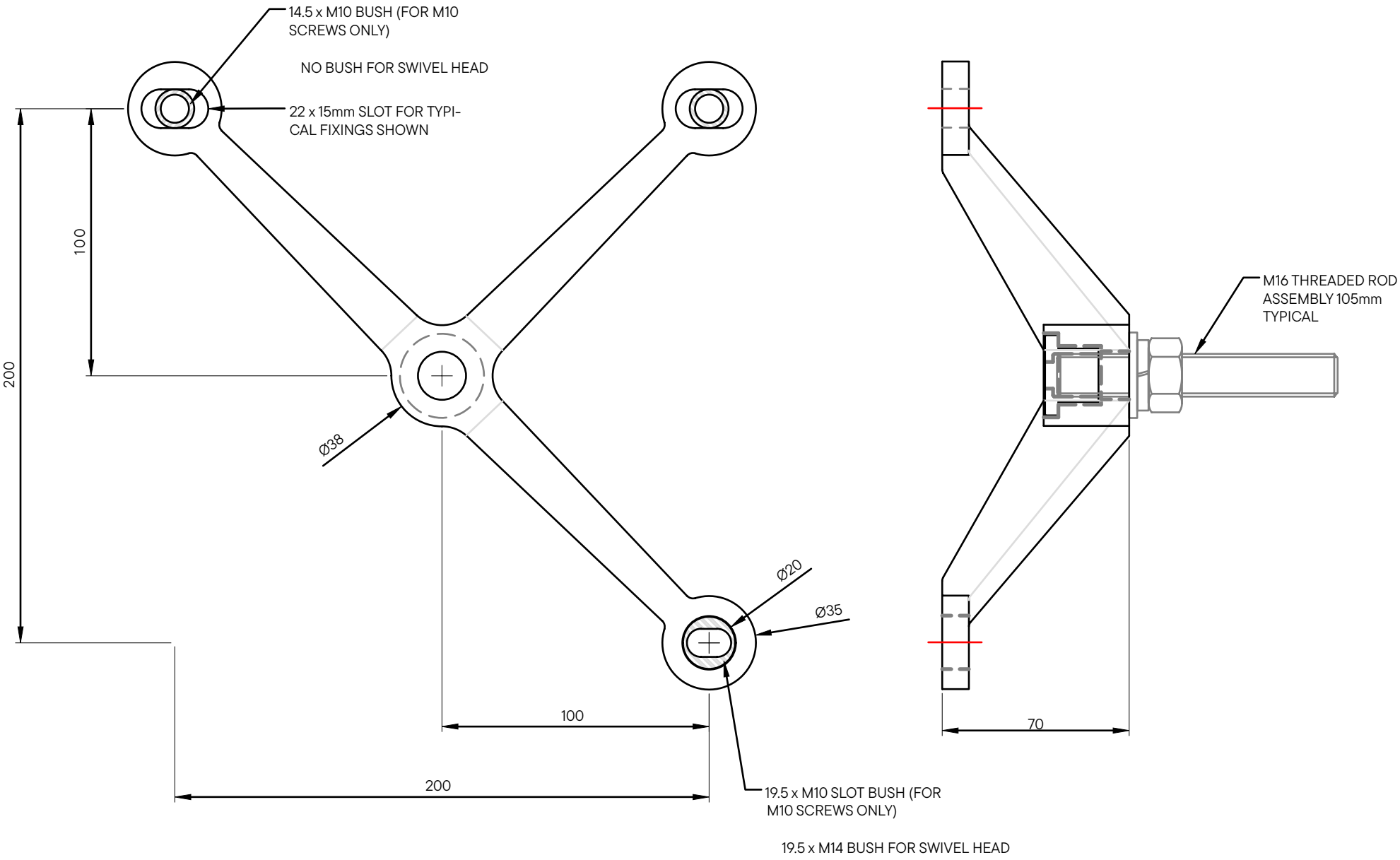

TYPICAL GLASS FIXING OPTIONS:

M10 CSK SCREW & RA DISC

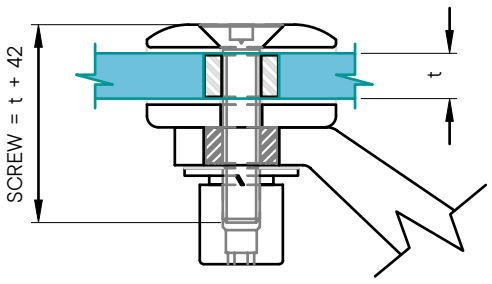

- M10 AGA NUT
- M10 SPRING WASHER
- 30 x 2 x M10 FLAT WASHER
- 30 x 0.8 x M10 FIBRE/PLASTIC GASKET
- M10 BUSH TO SUIT SPIDER PALM
- 446 SPIDER PALM
- 50 x 6mm DISC
- 50 x 0.8 x M10 FIBRE/PLASTIC GASKET
- 19.5 x 10.5 BUSH SUIT GLASS THICKNESS
- 50 x 0.8 x M10 FIBRE/PLASTIC GASKET
- 50 x 6 x M10 RA DISC22mm

60/22-22n SWIVEL

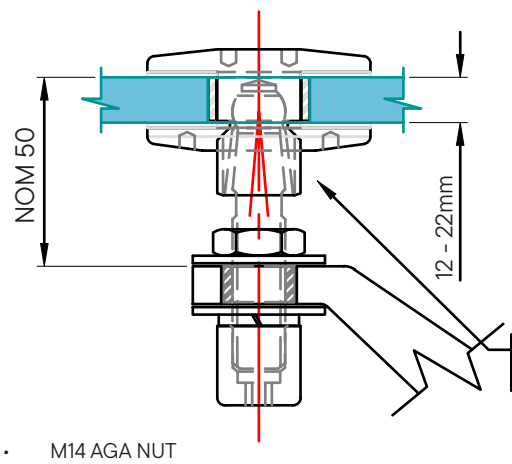

- M14 AGA NUT
- M14 SPRING WASHER
- 35 x 2 x M14 FLAT WASHER
- 35 x 0.8 x M14 FIBRE/PLASTIC GASKET
- M14 BUSH TO SUIT SPIDER PALM
- 446 SPIDER PALM
- 35 x 0.8 x M14 FIBRE/PLASTIC GASKET
- 35 x 2 x M14 FLAT WASHER
- M14 NUT
- 60/22/22n SPIDER FITTING INCLUDES BUSH TO SUIT GLASS THICKNESS & WASHERS/GASKETS TO GLASS SURFACES

60/22-42n SWIVEL

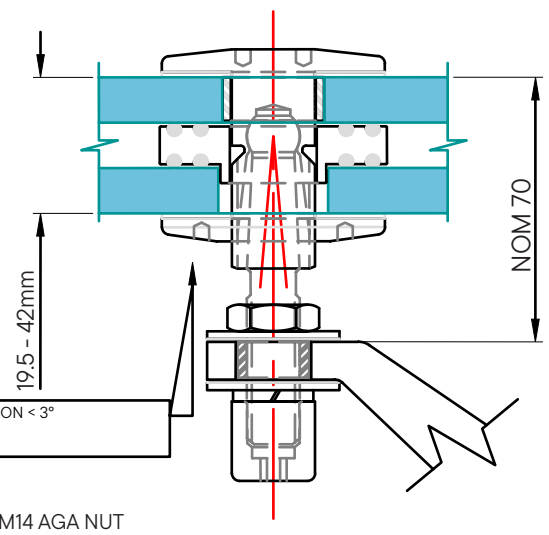

- M14 AGA NUT
- M14 SPRING WASHER
- 35 x 2 x M14 FLAT WASHER
- 35 x 0.8 x M14 FIBRE/PLASTIC GASKET
- M14 BUSH TO SUIT SPIDER PALM
- 446 SPIDER PALM
- 35 x 0.8 x M14 FIBRE/PLASTIC GASKET
- 35 x 2 x M14 FLAT WASHER
- M14 NUT
- 60/22/42n SPIDER FITTING, INCLUDES BUSH TO SUIT GLASS THICKNESS & WASHERS/GASKETS TO GLASS SURFACES
- CUSTOM IGU SPACER (TO SUIT IGU, TESTING MAY BE REQUIRED)

HOLE DETAILS FOR TOUGHENED GLASS:



NOTE: HOLE DETAILS FOR TOUGHENED LAMINATED GLASS ARE PROJECT SPECIFIC. CONTACT OPUS HARDWARE FOR DETAILS

HOLE DETAILS FOR IGU :

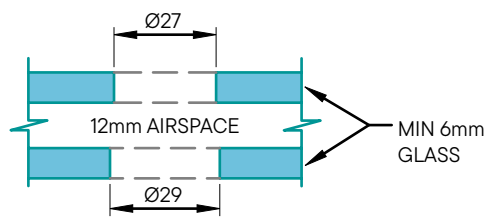

THIS DOCUMENT IS THE PROPERTY OF OPUS HARDWARE. IT MUST NOT BE COPIED NOR THE CONTENTS PASSED ON TO ANY THIRD PARTY WITHOUT THE CONSENT OF THE COMPANY.

OPUS HARDWARE 446 SERIES
HEAVY DUTY SPIDER

Sheet name:
446-3 HEAVY DUTY SPIDER

Scale:	Dwg no:	Revision:
1: 2 @ A3	446-3	B

www.opushardware.com