CX290 SPIDER

EUROGLASS RANGE | TWO WAY 90° | HOLE FIXED

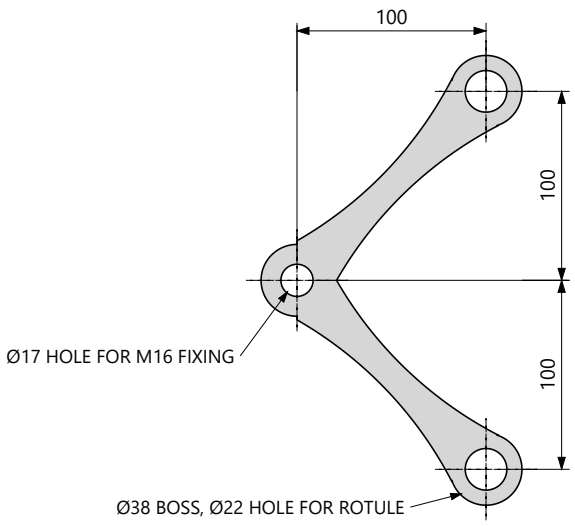

PLAN | SCALE 1:4

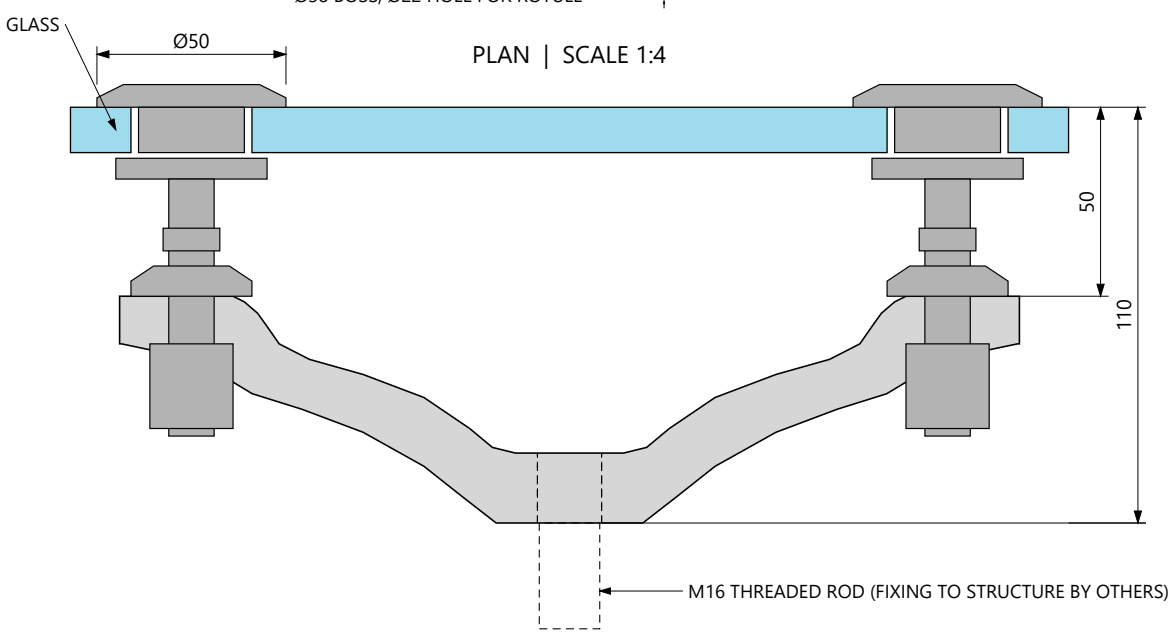

ELEVATION

DIMENSIONS ARE FROM THE OUTER GLASS FACE

CXFHABM12 ARTICULATED ROTULE

SECTION | SCALE 1:1

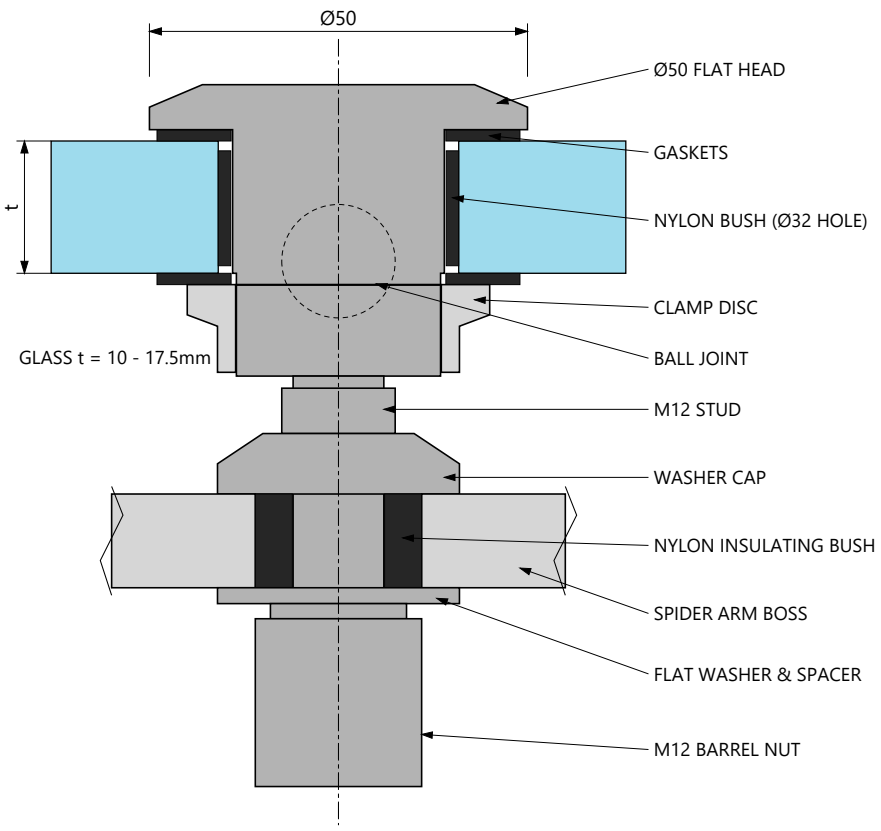

TYPICAL FIXINGS TO STRUCTURE (BY OTHERS):

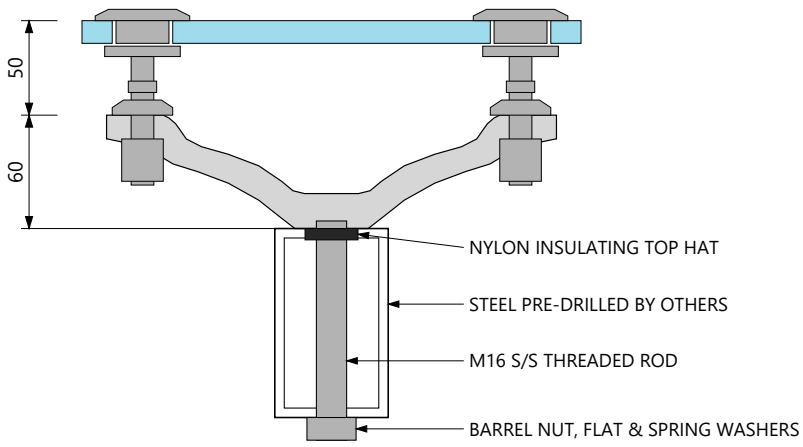

FIXING OPTION A

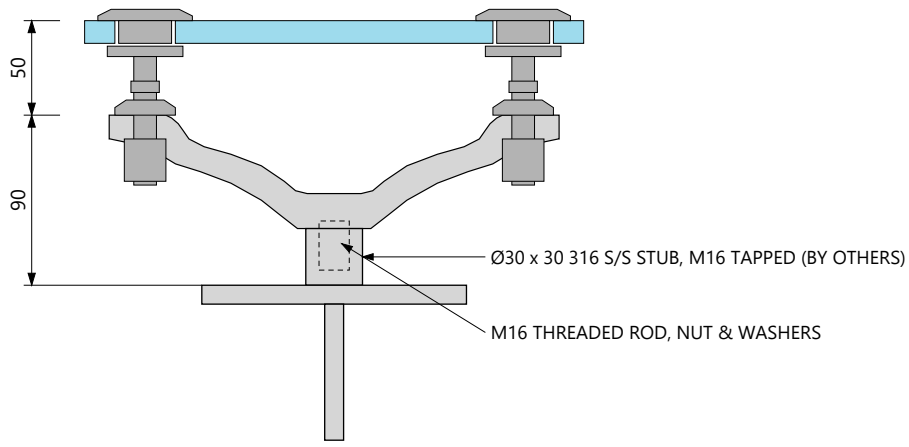

FIXING OPTION B

HOLE DETAILS FOR TOUGHENED GLASS:

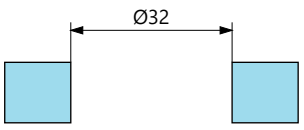

FACADE GLASS

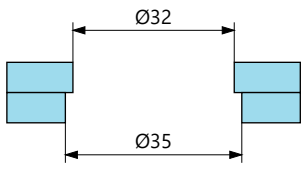

LAMINATED FACADE (Ø35 INNER PLY)

NOTE: HOLE DETAILS FOR TOUGHENED LAMINATED GLASS ARE PROJECT SPECIFIC.
CONTACT OPUS HARDWARE FOR DETAILS

KIT CONTENTS:

- CX290SS KIT: 1 x CX290SS-C SPIDER + 2 x CXFHABM12SS ROTULES
- CX290SS-C: SPIDER CASTING ONLY

TECHNICAL DETAILS:

- 316 STAINLESS STEEL, SATIN FINISH
- ROTULE SUITS 10mm TO 17.5mm GLASS
- Ø32 GLASS HOLE (SEE HOLE DETAILS)
- FIXINGS TO THE SUPPORTING STRUCTURE ARE PROJECT SPECIFIC AND SUPPLIED BY OTHERS
- CLEARANCE RANGE: SOLD WHILE STOCKS LAST

THIS DOCUMENT IS THE PROPERTY OF OPUS HARDWARE. IT MUST NOT BE COPIED NOR THE CONTENTS PASSED ON TO ANY THIRD PARTY WITHOUT THE CONSENT OF THE COMPANY.

OPUS HARDWARE EUROGLASS RANGE
CX290 TWO WAY 90° SPIDER

Sheet name:
CX290SS EUROGLASS SPIDER

Scale:	Dwg no:	Revision:
1:2 @ A3	CX290SS	A

www.opushardware.com