FNZCX2 SPIDER

EUROGLASS RANGE | FOUR WAY | GLASS FIN MOUNTED

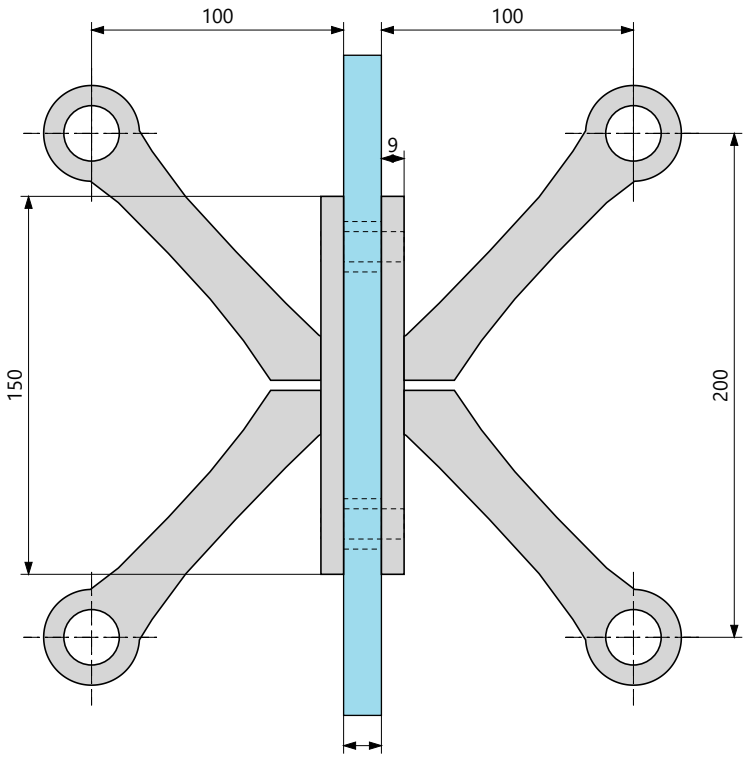

FRONT VIEW (FROM INSIDE)

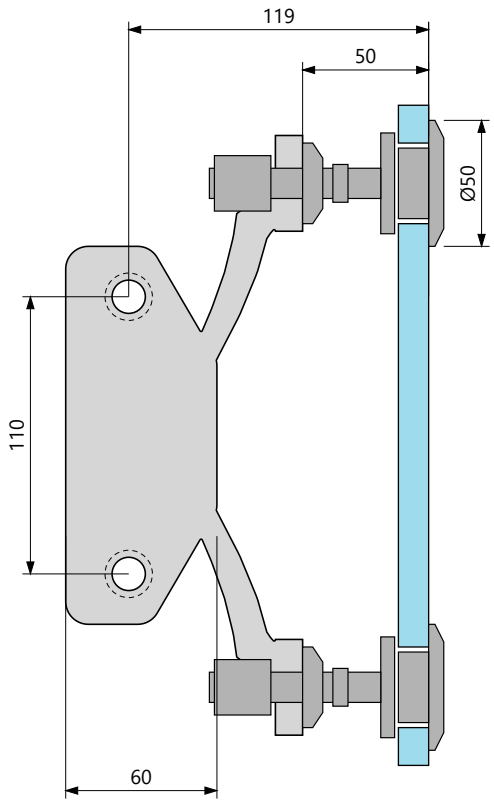

SIDE VIEW

119 = BOLT LINE TO OUTER GLASS FACE (109 / 101 TO THE INNER FACE FOR 10 / 17.5mm GLASS). 50 = ARM BOSS TO OUTER GLASS FACE

CXFHABM12 ARTICULATED ROTULE

SECTION | SCALE 1:1

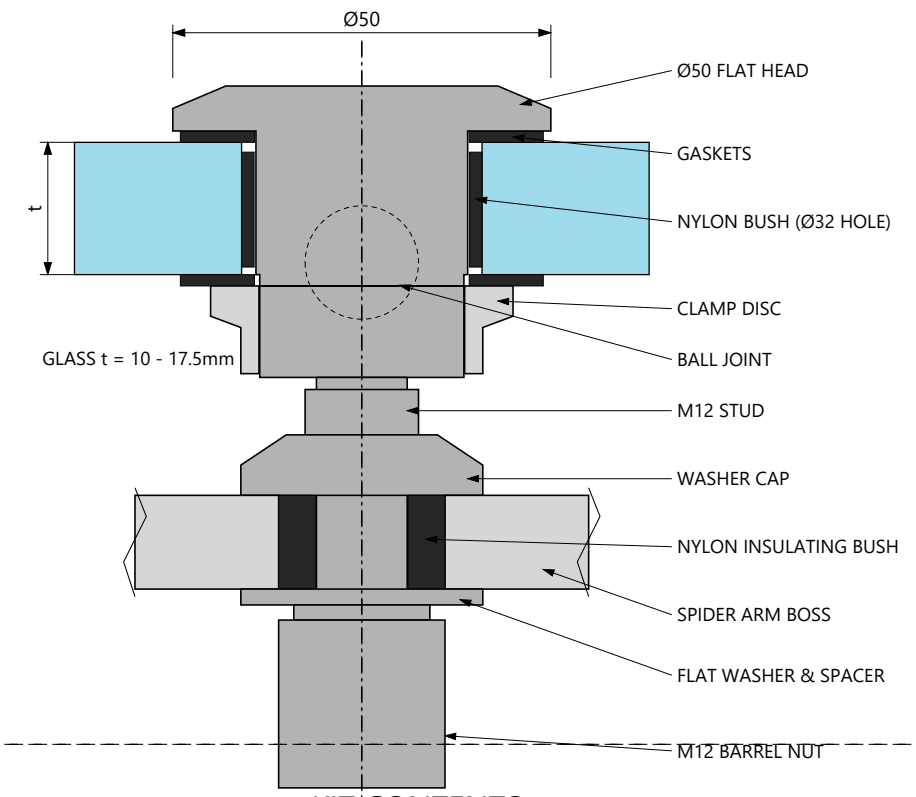

HOLE DETAILS FOR TOUGHENED GLASS:

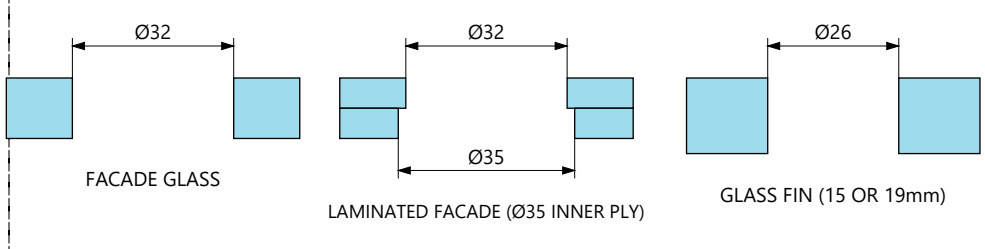

NOTE: HOLE DETAILS FOR TOUGHENED LAMINATED GLASS ARE PROJECT SPECIFIC. CONTACT OPUS HARDWARE FOR DETAILS

FIN FIXING: 2 x M12 THROUGH Ø26 FIN HOLES AT 110 CENTRES, WITH BUSHES ISOLATING THE BOLTS FROM THE GLASS

KIT CONTENTS:

- FNZCX2SS KIT: 1 x FNZCX2SS-C SPIDER + 4 x CXFHABM12SS ROTULES
- FNZCX2SS-C: SPIDER CASTING ONLY

TECHNICAL DETAILS:

- 316 STAINLESS STEEL, SATIN FINISH
- ROTULE SUITS 10mm TO 17.5mm FACADE GLASS
- Ø32 FACADE GLASS HOLE (SEE HOLE DETAILS)
- FITS 15mm AND 19mm GLASS FINS (Ø26 FIN HOLES)
- ROTULES 100 OUT FROM THE FIN FACE
- CLEARANCE RANGE: SOLD WHILE STOCKS LAST

THIS DOCUMENT IS THE PROPERTY OF OPUS HARDWARE. IT MUST NOT BE COPIED NOR THE CONTENTS PASSED ON TO ANY THIRD PARTY WITHOUT THE CONSENT OF THE COMPANY.

OPUS HARDWARE EUROGLASS RANGE
FNZCX2 FOUR WAY FIN SPIDER

Sheet name:
FNZCX2SS EUROGLASS SPIDER

Scale:	Dwg no:	Revision:
1:3 @ A3	FNZCX2SS	A

www.opushardware.com