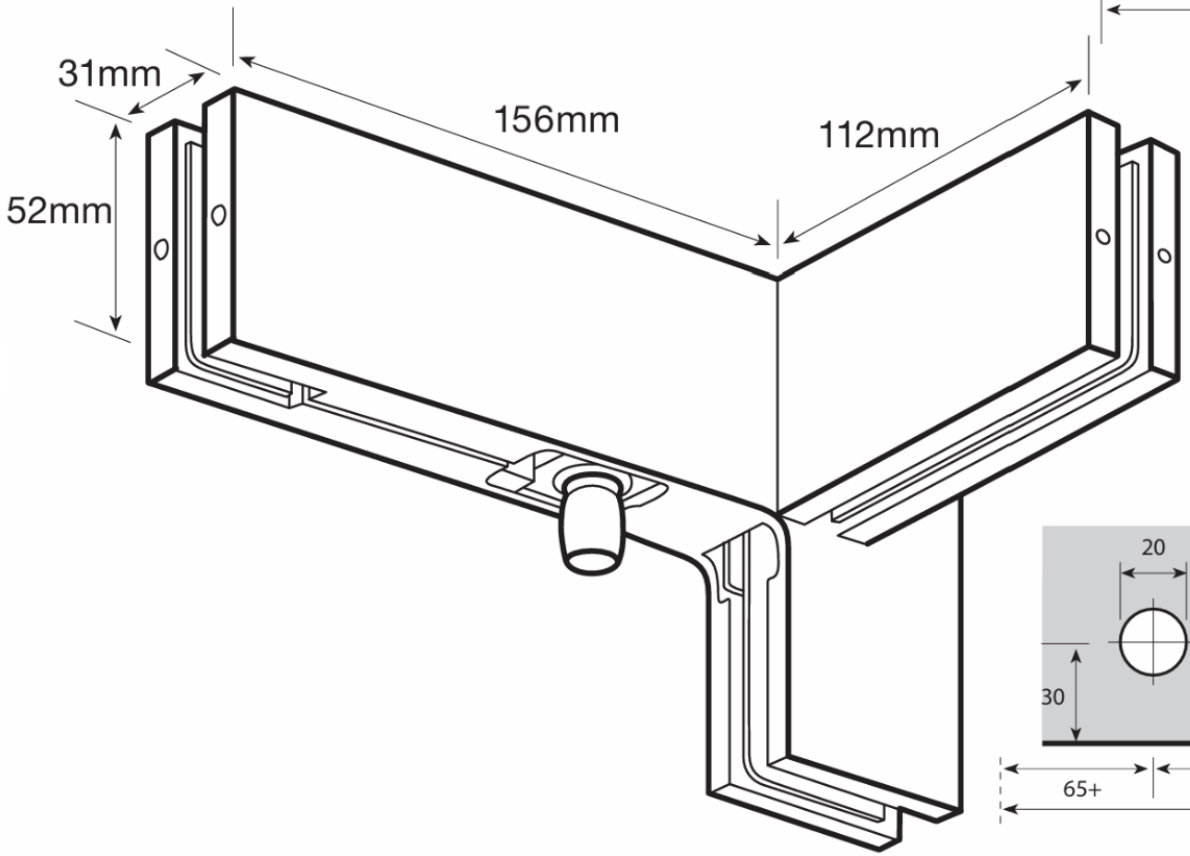

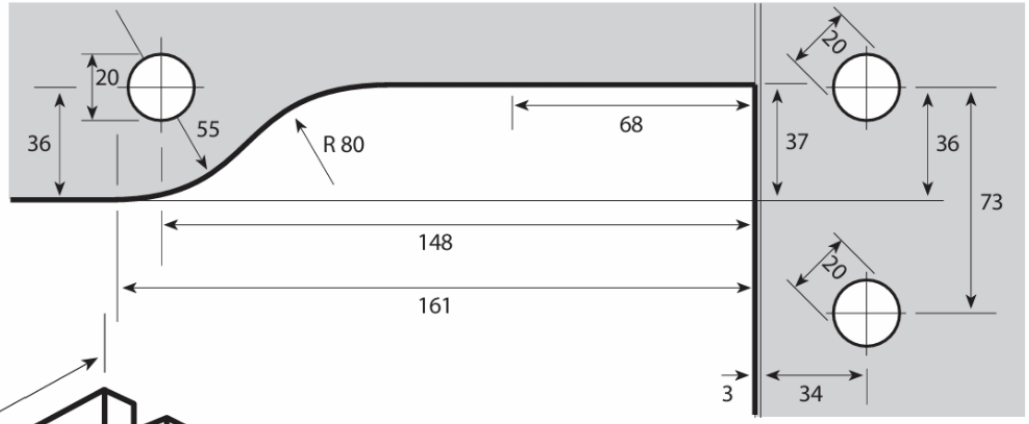

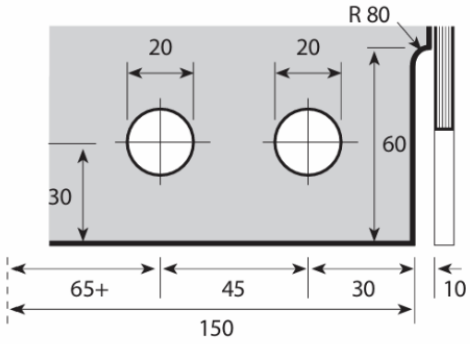

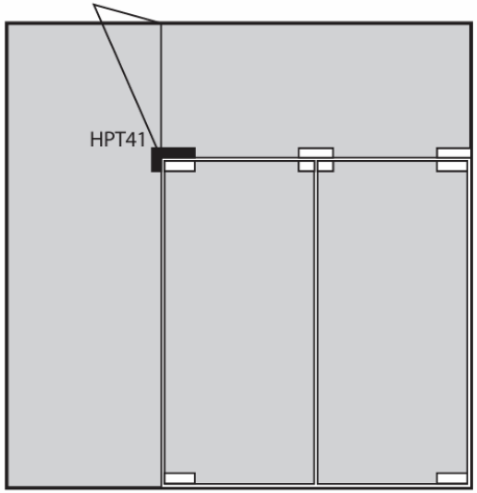

Looking at outside